Technology and spectrum for machine-to-machine communications

Hamid Reza KARIMI

Standards & Industry
Corporate Strategy
21 March 2016

CEPT Workshop on
Machine-to-Machine Communications – Mainz, Germany
21-22 March 2016

HUAWEI TECHNOLOGIES

Contents

- Introduction
- Technologies
- Spectrum
- Conclusions

Introduction

- The terms Internet of Things (IoT) and Machine-to-Machine (M2M) are often used interchangeably.
- IoT is the broader term and describes the interconnection of multiple M2M applications, enabling the exchange of data across multiple industry sectors.
- IoT is expected to deliver benefits to a range of sectors including energy, transport, and health care, among others.
- IoT is still in its infancy, with stakeholders navigating a dynamic landscape. But the many SDOs and alliances which have formed are evidence of the immense interest in this field.
- In this presentation we briefly consider some of the M2M technologies standardised at 3GPP, and then address some of the key questions which relate to M2M and the use of the radio spectrum.

IoT SDOs and alliances

Contents

- Introduction
- Technologies
- Spectrum
- Conclusions

M2M technologies at 3GPP

- Three technologies are being standardized in 3GPP for IoT:
  - **EC-GSM-IoT** Enhancement to EGPRS for M2M
  - **eMTC** Further LTE enhancements for machine type communications, building on work started in Release-12
  - **NB-IoT** New narrowband radio added to LTE platform for M2M
- Specifications to be frozen in Q2 2016 (Release 13).
- NB-IoT is of particular interest:
  - Very low device cost
  - Extended coverage (164 dB maximum coupling loss)
  - Long battery life (10 years)
  - Support for massive number of devices (50,000 per cell)

NB-IoT: Use of spectrum

- NB-IoT is especially innovative from the perspective of efficient use of spectrum. NB-IoT can operate in three modes:

  1) Stand-alone operation
  2) Guard band operation
  3) In-band operation

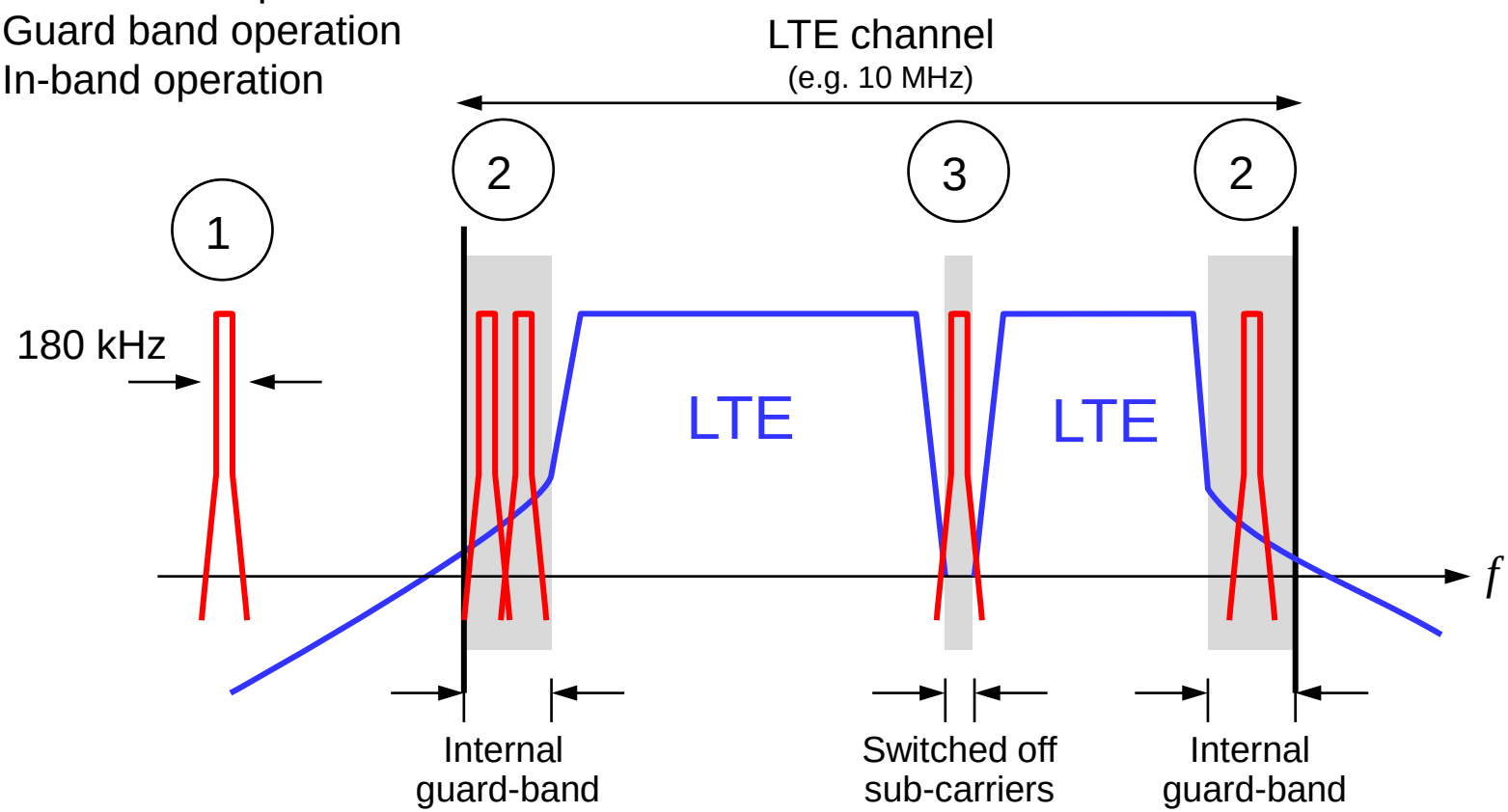

End-to-end NB-IoT system

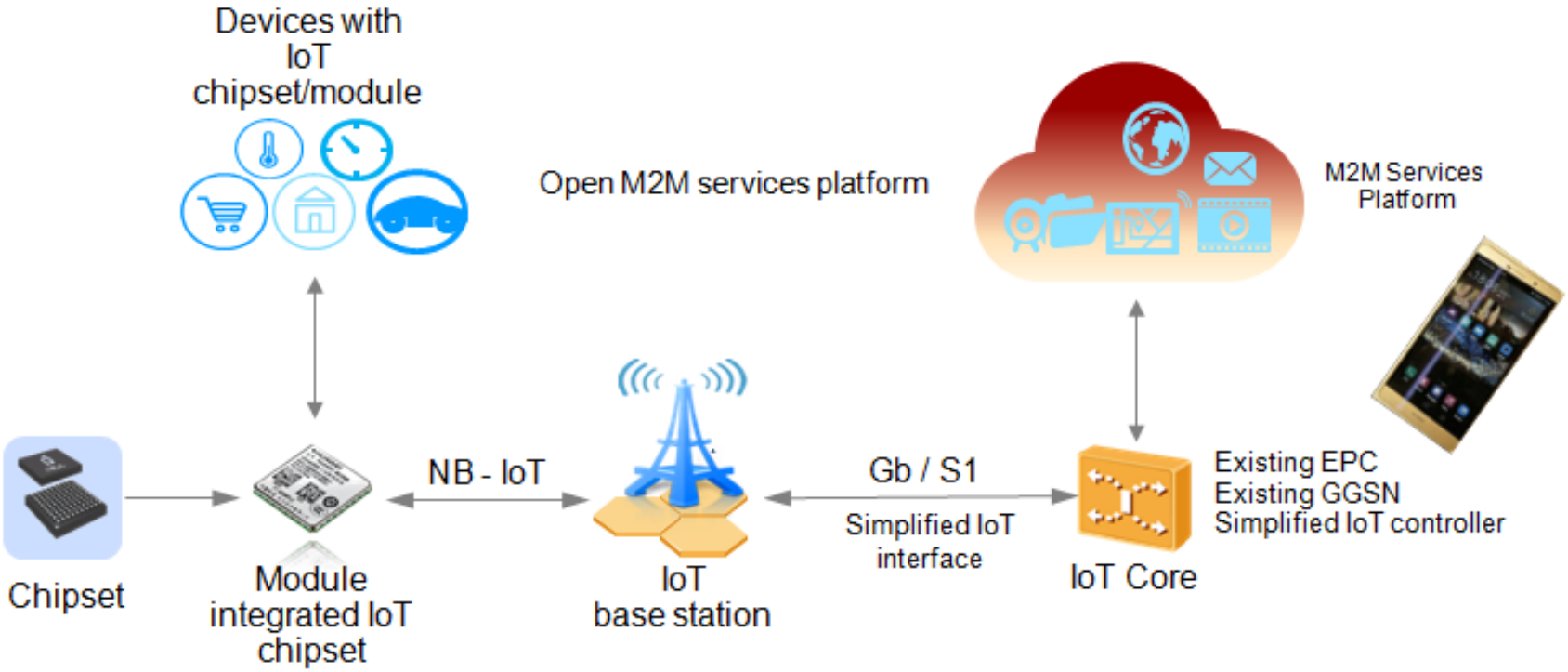

Contents

- Introduction
- Technologies
- Spectrum
- Conclusions

Questions on radio spectrum and M2M…

- Some key questions/topics:
  - Should M2M spectrum be licensed or licence-exempt?
  - What is the relevance of WRC allocations?
  - Use of existing mobile broadband (MBB) spectrum for M2M.
  - If "new" spectrum is needed for M2M, what should be its designation?
  - Who should own the spectrum usage rights for M2M?
  - Should M2M use public or private wireless networks?
- We explore these questions in what follows.

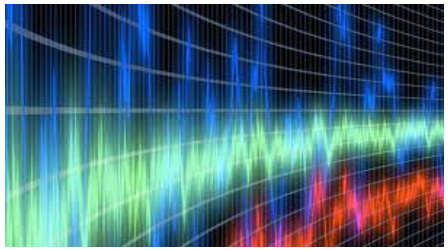

ECN = Electronic communication network.

Classification

and terminology in Europe

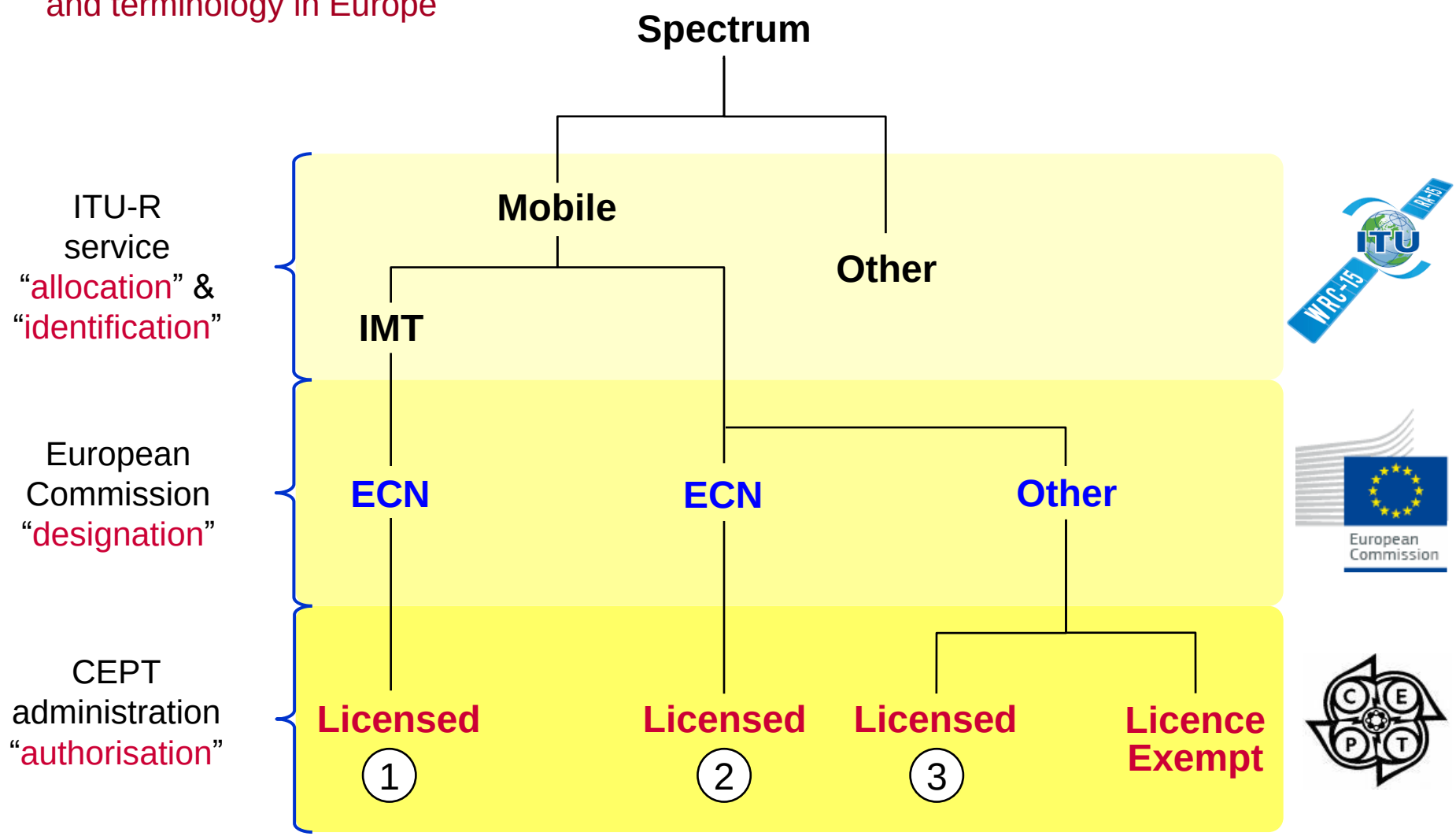

Licensed or unlicensed spectrum?

- Many IoT use cases involve short-range and/or delay-tolerant applications.
- These can be supported via licence-exemption authorisation for access to the radio spectrum. Here, equipment belonging to a variety of users operate on a *non-interference non-protected* basis.
- We believe sufficient harmonised spectrum is available for licence-exempt use by the IoT.
- In Europe this includes the
  - well-established 862-870 MHz, 2.4 GHz, and 5 GHz[1] bands, and
  - recently harmonised 870-876/915-921 MHz band.

1 Also note regional and global initiatives to make the whole of the band 5150-5925 GHz available to RLANs. See the EC Mandate RSCOM13-32rev3 to CEPT of September 2013, or the more recently defined Agenda Item 1.16 of WRC-19. Similar initiatives are being pursued by the FCC.

Licensed or unlicensed spectrum?

- However, certain important IoT use cases involve delay-sensitive applications with high availability requirements.
- Examples include radio telemetry and telecontrol for national utility infrastructures (Smart Grid) and industrial processes (Smart Factory), and safety-related intelligent transport systems (ITS).
- The nature of these applications demands licensed authorisation for access to spectrum for M2M communications, where the quality of service can be appropriately managed.
- We believe that the availability of licensed spectrum for M2M communications is an important area for consideration by administrations[1].
- The remaining slides address licensed spectrum…

1 Strictly speaking, spectrum authorisation (licensed vs. licence exempt) is a matter for national administrations (not the ITU or the EC).

WRC allocations

- The ITU-R *Mobile Service* is a natural match for M2M and the IoT.
- *Primary* allocation to the Mobile Service is strongly preferred. This would afford legal protection in the context of cross-border interference.
- There is an abundance of bands with primary allocation to the Mobile Service. These include licensed and licence exempt bands used by 2G/3G/4G and Wi-Fi. Today, the vast majority of (if not all) M2M communications occurs in bands which have primary allocation to the Mobile Service.

- Availability of bands with primary allocation to the Mobile Service <u>is not</u> a bottleneck for M2M communications.

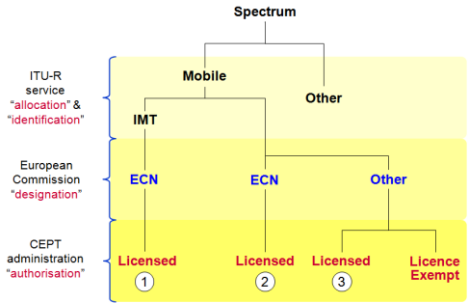

WRC IMT identification

- As a vendor of IMT equipment, we have a preference for M2M bands which are globally (or at least regionally) identified for IMT[1].
- IMT identification signals the intention of administrations to allow deployment of IMT networks in a band, and provides certainty to the market to invest in equipment, thereby exploiting economies of scale.
- But how essential is IMT identification?
- Note that IMT identification does not afford any legal rights. It is merely a mechanism to mitigate uncertainty, and encourage investment in mass market IMT equipment.

- Accordingly, global/regional IMT identification is important but is not strictly essential.

1 A band is identified for IMT via a footnote in the Radio Regulations. Such a footnote would state that: "The band X-Y MHz is identified for use by administrations A/B/C wishing to implement International Mobile Telecommunications (IMT) in accordance with Resolution Z."

Is existing MBB spectrum appropriate for M2M?

- Is existing mobile broadband (MBB) spectrum[1] appropriate for M2M, or do we need "new" spectrum for M2M?
  Should any "new" spectrum for M2M be designated for ECN or M2M?

- The first question relates to business models and economics.
  and is a question of opportunity cost and *marginal* utility of spectrum:

> **Question:** Is it is economically viable for a MNO to use its existing spectrum for M2M rather than for MBB?

- To answer this, one needs to know the M2M business case/profit opportunity as a function of required M2M bandwidth. For a given M2M bandwidth,

  if (M2M \$) $\geq$ (MBB \$), then the answer is YES.

- How about regulatory constraints?

1 Including the 800, 900, 1800, 2100 and 2600 MHz bands.

Regulations and M2M in existing MBB spectrum

Technology neutrality

- The situation varies from band to band. Recent spectrum regulations in Europe are *technology neutral*, but older spectrum regulations are *technology specific*.

Example:

- The recent 800 MHz MBB licences are technology neutral, and do not refer to any radio technology in the TLCs. It appears there are no regulatory barriers to deploying, say, NB-IoT in the 800 MHz band (so long as all the TLCs are met).

- The 900 MHz licences explicitly refer to GSM/UMTS/LTE/WiMAX, and require compliance with specific ETSI Harmonised Standards. Current versions of the ETSI standards do not cover NB-IoT. So the strict "*letter of the law*" suggests that deployment of NB-IoT in the 900MHz band is not permitted.

- However, technology-specific regulatory constraints can be readily remedied by updates to the ETSI Harmonised Standards.

ECN or M2M designation for new M2M spectrum?

- As a harmonisation measure, the EC/ECC designate spectrum for specific uses. Example: spectrum used today by MNOs is designated for ECN[1]. There are currently no *M2M designations*, other than 5875-5905 MHz designated for ITS.
- Should any "new" licensed spectrum for M2M be designated for ECN or M2M?
- Each type has its benefits:
  - A designation for ECN is more flexible, less restrictive, is future proof, and can encompasses all M2M applications.
  - A designation for M2M might be helpful in promoting IoT, and *labeling* a band for a specific M2M application (e.g., ITS).

- We have a preference for the broader ECN designation for generic M2M applications.

1 Electronic Communication Network.
The ECC uses the term Mobile/Fixed Communication Network (MFCN).

Public or private networks for M2M?

- Some Verticals might be reluctant to use *public* mobile communication networks. This can be for a number of reasons:
  - Some Verticals already use private wireless networks for M2M applications, and wish to protect their investments and/or control over their infrastructure.
  - Some Verticals consider their applications to be mission critical and safety related, and believe public networks may not meet their requirements, or that the operators' commercial incentives are not aligned with theirs.
  - Some Verticals associate public networks with prohibitively expensive spectrum licences, and prefer to avoid licensed MBB spectrum.
- While most Verticals wish to benefit from the most advanced IMT technologies, many wish to use their own private wireless networks.

Unlicensed spectrum

No financial transaction between regulator and users for access to spectrum.

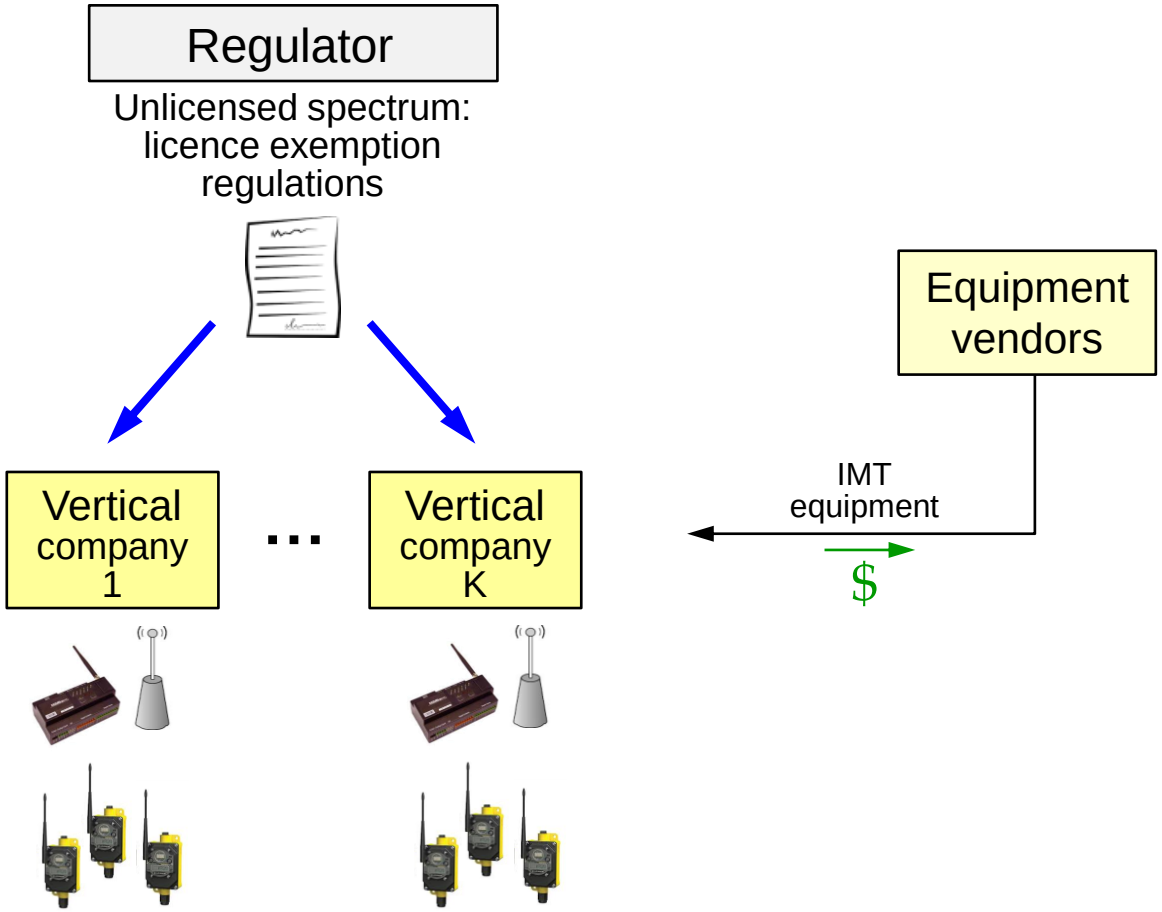

*M2M **today**:*

RFID;
Electronic toll collection;
Smart Home;
Safety related ITS;

Licensed spectrum

Public network model

MNOs own spectrum licenses and (assisted by MVNOs) provide M2M radio services to vertical industries.

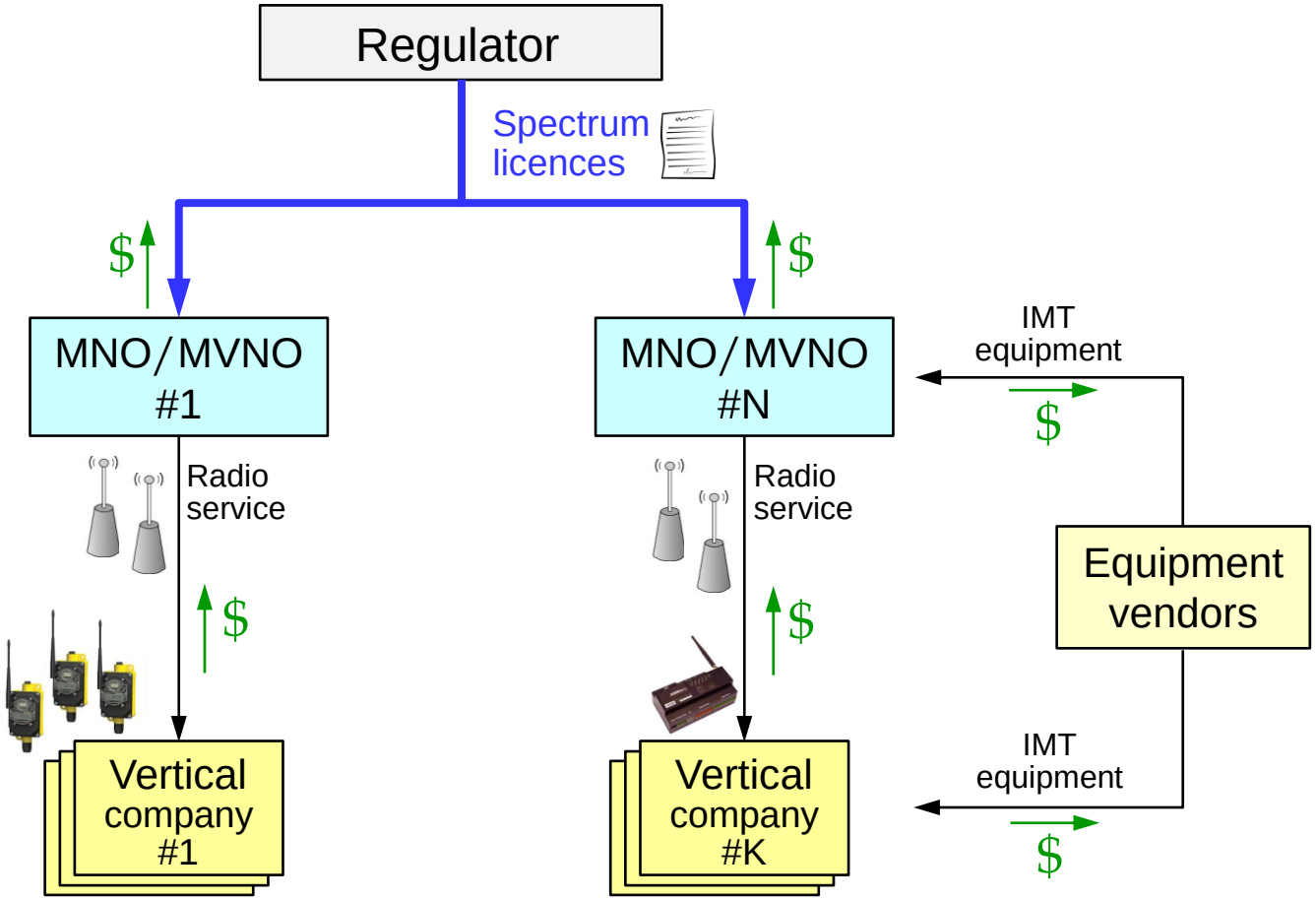

*M2M **today**:*

Smart metering; PPDR[1];

1 Public mobile networks considered for PPDR in some countries.
PPDR is not strictly M2M, but is an example of MNOs serving a Vertical.

Licensed spectrum

Private network model

The band manager aggregates the demand for spectrum from various vertical entities.

In some countries, the regulator itself acts as the band manager.

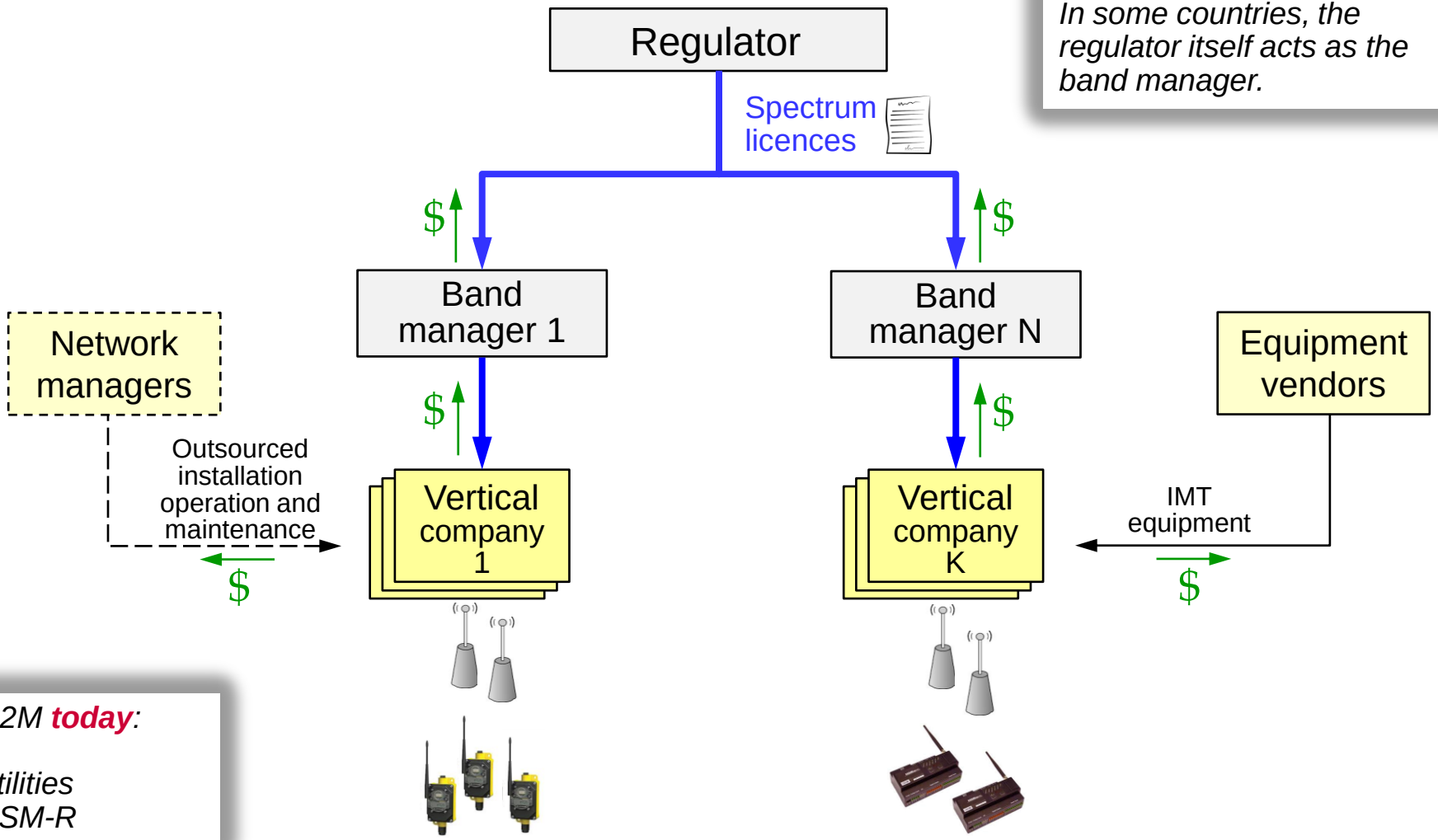

*M2M **today**:*

Utilities
GSM-R

Public network model

- This is similar to the MBB model in place today.
- MNOs will use their existing wireless infrastructure to provide M2M radio services. MNOs will use their existing spectrum portfolio, or purchase licences for additional spectrum if required.
- Operation and maintenance of the radio infrastructure will be the responsibility of the MNOs.
- The M2M customers will be consumers or companies engaged in a range of vertical industries; e.g., utility companies, factories, automobile vendors, etc.
- The MNOs might be assisted by multiple MVNOs (M2M service providers) each focussing on specific verticals. A MNVO may in turn use multiple MNOs to reach a larger customer base.
- Today's examples of this model for serving Verticals:
  - Smart Metering – Telefonica using GSM-900 in the UK.
  - Emergency services – EE using LTE-800 in the UK.

Private network model

- Here, spectrum licences are purchased by M2M “band managers”.
- A band manager allocates spectrum to its customers, and performs any required frequency planning to avoid interference. A band manager would typically not own or operate radio infrastructure.
- A band manager’s customers will be companies engaged in businesses in a range of vertical industries; These may own radio infrastructure, but may out-source its operation and maintenance.
- A band manager *aggregates the demand for M2M spectrum*. A band manager might be an independent organisation, or a company set up by a consortium of its customers. Multiple band managers may exist in a country, each with licences for specific portions of M2M spectrum.
- Today’s example of this model for serving Verticals:
  - JRC as the UK band manager for the electricity utilities.

Comparison

- We acknowledge that some Verticals may be initially cautious about the use of public mobile communication networks, and may prefer private networks.
- But the infrastructure CAPEX and expertise needed to operate advanced wireless networks must not be under-estimated.
- We believe public mobile networks are well placed to provide the appropriate levels of service for M2M communications to a range of Verticals, and can exploit huge investments in radio infrastructure and economies of scale in equipment.

Contents

- Introduction
- Technologies
- Spectrum
- Conclusions

Conclusions

- Certain important IoT use cases require licensed access to spectrum where the quality of service can be managed; e.g., Smart Grid, Smart Factory, ITS.
- Licensed spectrum for M2M can be drawn from an abundance of bands with global primary allocation to the Mobile Service in the ITU Radio Regulations. It is highly beneficial for M2M spectrum to have IMT identification in the Radio Regulations, but this is not essential.
- Depending on the business case and the bandwidth required for M2M, existing mobile broadband spectrum may be appropriate for use by M2M.
- It should be noted that existing licences for MBB spectrum are not always technology neutral (even in Europe). However, this is not a fundamental issue and can be readily overcome by updating the relevant ETSI ENs.

Conclusions

- Where “new” spectrum might be required for M2M, we prefer an ECN designation because it is less restrictive and is future proof.
- We believe public mobile networks are well placed to provide M2M services to the Verticals, exploiting huge investments in radio infrastructure and economies of scale in equipment.
- NB-IoT is an exciting and powerful new narrowband radio technology for the provision of low-cost massive M2M communications, being specified by 3GPP.
- M2M communications functionality will be designed into 5G from the start.

Thank you

www.huawei.com

Copyright©2011 Huawei Technologies Co., Ltd. All Rights Reserved.
The information in this document may contain predictive statements including, without limitation, statements regarding the future financial and operating results, future product portfolio, new technology, etc. There are a number of factors that could cause actual results and developments to differ materially from those expressed or implied in the predictive statements. Therefore, such information is provided for reference purpose only and constitutes neither an offer nor an acceptance. Huawei may change the information at any time without notice.